SN-35 C/D ENDURA TRN

Single lever cartridge Standard 35mm

08SN35L4501



Technical specifications

Prescribed tightening torque (1)	10-12 N.m
Opening angle	25°
Rotation angle	90°
Working pressure (recommended)	1 - 5 bar
Burst pressure	>50 bar
Life cycle EN-817 NF U3 (x2) ASME 112.18.1 M (x2) GB18145	175,000 cycles 1,000,000 cycles 140,000 cycles
Fidelity(2)	<5°C
Sensitivity (r=45mm) (2)	13° angle
Constant 63°C & 50° C (6 l/min-3 l/min) (2)	< 4° C - < 6°C
Max. Hot water	90 °C
Max. Hot water recommended	60 - 65 °C
Flow rate @ 3 bar(2)	
Free flow	28,80 l/min
C-Restrictor	20,90 l/min
Noise level (C-Restrictor)	20 +/- 2dB (2)
Operation Torque (3 bar)	
Open - close	0,20 ÷ 0,35 Nm
Turn left-right	0,15 ÷ 0,30 Nm

Flow rate at MIX(2)

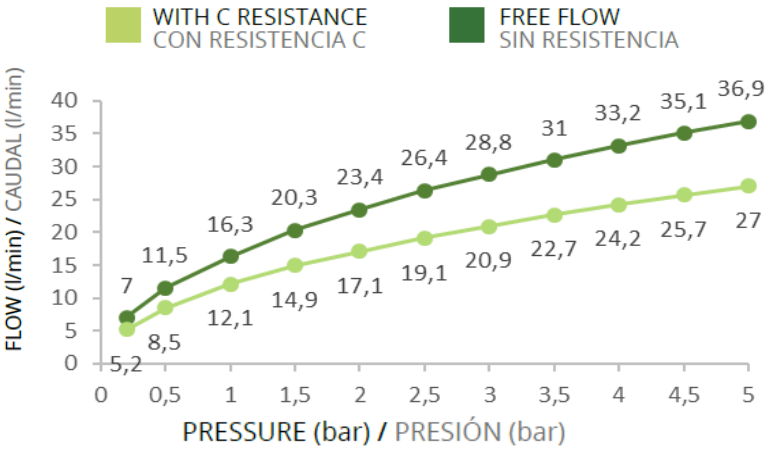

Flow rate at MIX(2)

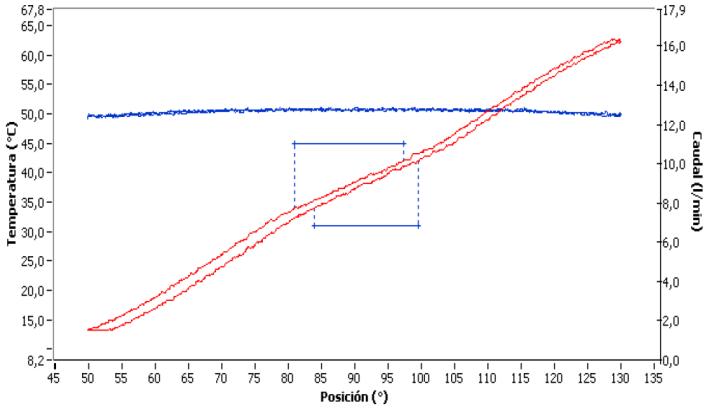

(1) The prescribed tightening torque is related to faucet body and nut both in brass material, pitch 1,5mm and no lubricant applied on the threads. For other faucet body - nut material combinations please contact SEDAL.
(2) Measured with SEDAL faucet.

Single lever cartridge
Standard 35mm

SN-35 C/D
ENDURA TRN

Technical dimensions (3)

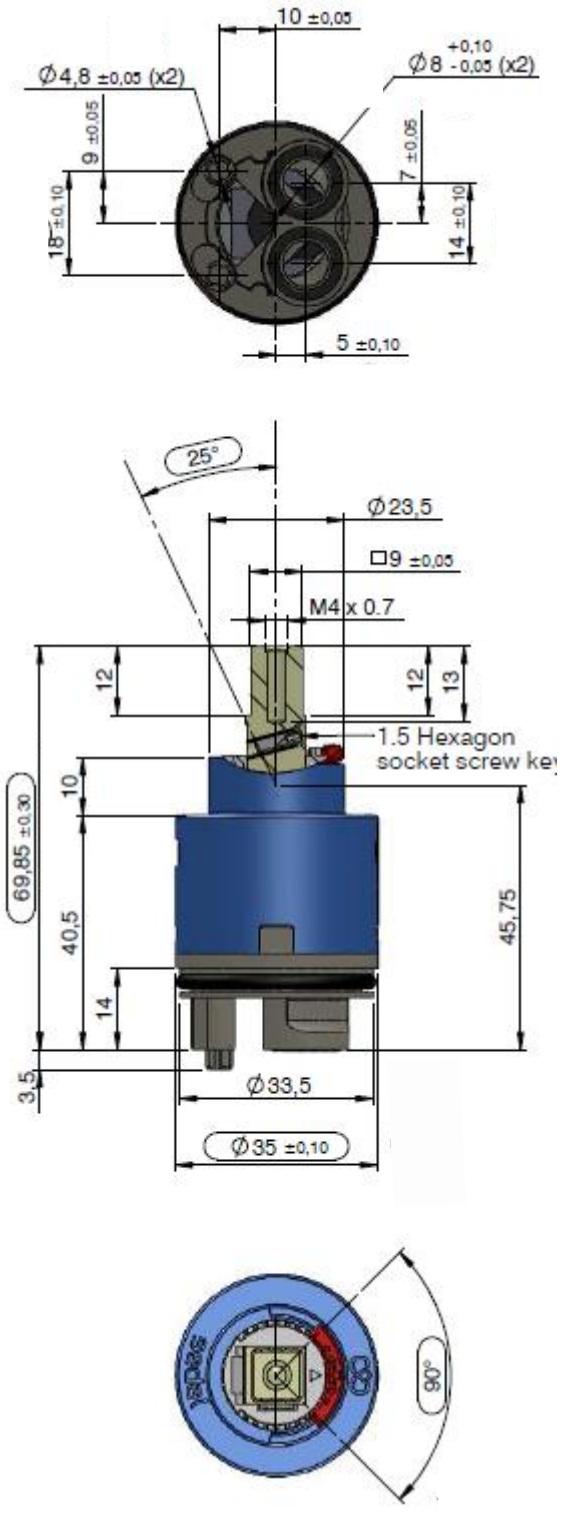

Machining prescription(4)

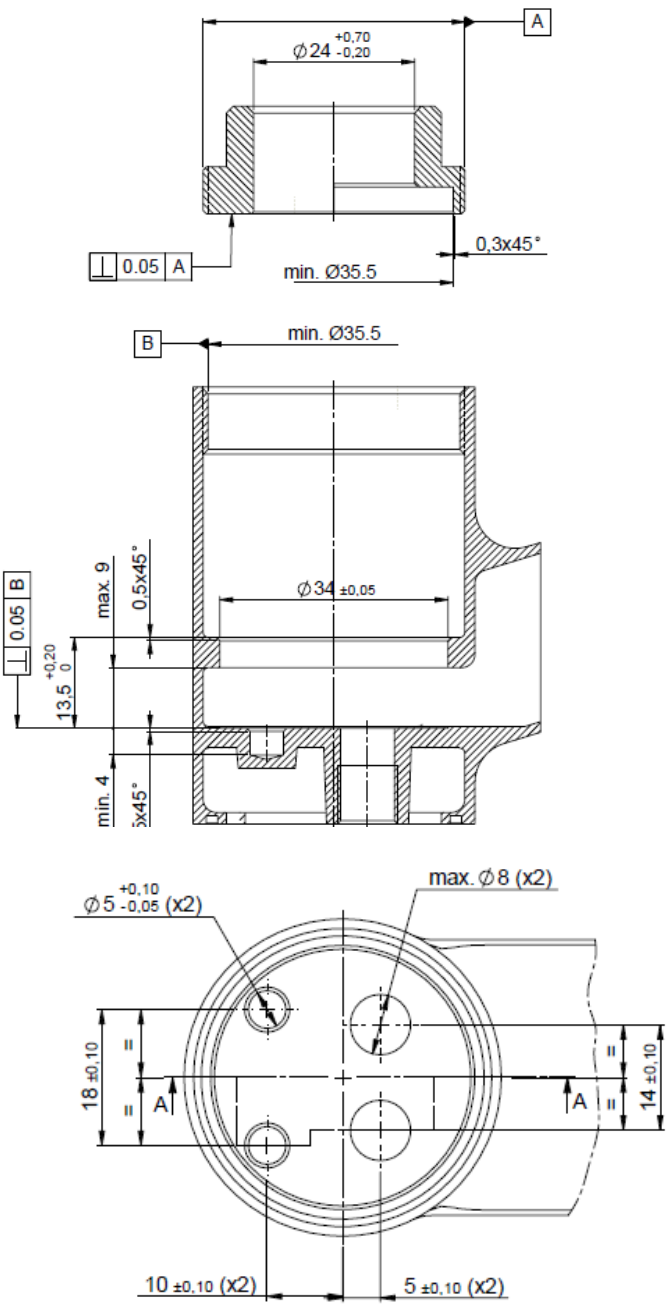

(3) Dimensions of the cartridge assembled into the faucet (without vertical gap between the cover and the base)
(4) Sealing surfaces must be free of burrs and sharp areas. The faucet body must be free of debris